THIS DRAWING IS UNPUBLISHED. RELEASED FOR PUBLICATION -.- .
© COPYRIGHT - BY TYCO ELECTRONICS CORPORATION. ALL RIGHTS RESERVED.

| LOC | DIST |
|---|---|
| CM | 00 |

REVISIONS

| P | LTR | DESCRIPTION | DATE | DWN | APVD |
|---|---|---|---|---|---|
| | F | ECO-07-018571 | 12SEP07 | KW | DB |

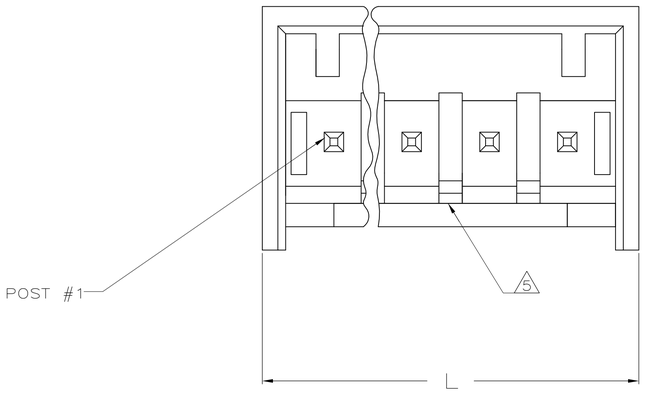


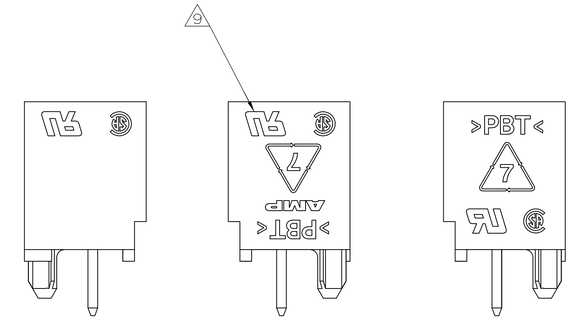


POSSIBLE MARKING CONFIGURATIONS
SCALE 5:1

1. MATERIAL: HEADER– POLYESTER UL94V–O (BLACK)
POST– COPPER ALLOY.

2. SOLDER SIDE OF P.C. BOARD SHOWN.

3. PARTS COMPLY WITH AMP SOLDERABILITY SPEC 109–11–2.

4. THE RETENTION TABS PROVIDE A ONE–TIME INTERFERENCE FIT IN THE .078 DIAMETER BOARD HOLE FOR HEADER ASSEMBLY RETENTION DURING SOLDERING.

5. LATCH DETENT FEATURE OCCURS 2 PLACES ON EACH END (MAXIMUM OF FOUR PER PART). FOR 2 THRU 5 CIRCUIT HEADERS, LATCH FEATURE OCCURS BETWEEN EACH CIRCUIT.

6. COORDINATE DIMENSION APPLIES FROM CENTER OF ACTUAL FEATURE.

7. GOLD PLATE,.000030 MIN,FOUR SIDES AS SHOWN,OVER NICKEL UNDERPLATE,.000050 MIN,ALL SIDES AND ENTIRE LENGTH OF POST.

8. TIN–LEAD (93/7)PLATE,.000150–.000350 THK, ALL FOUR SIDES,.140 REF.

9. UL AND CSA LOGO WILL APPEAR IN THIS AREA. AMP LOGO MAY APPEAR IN THIS AREA OR ON BOTTOM OF PART.

10. BRIGHT TIN PLATE .000150–.000350 THICK, ALL FOUR SIDES, .140 REF.

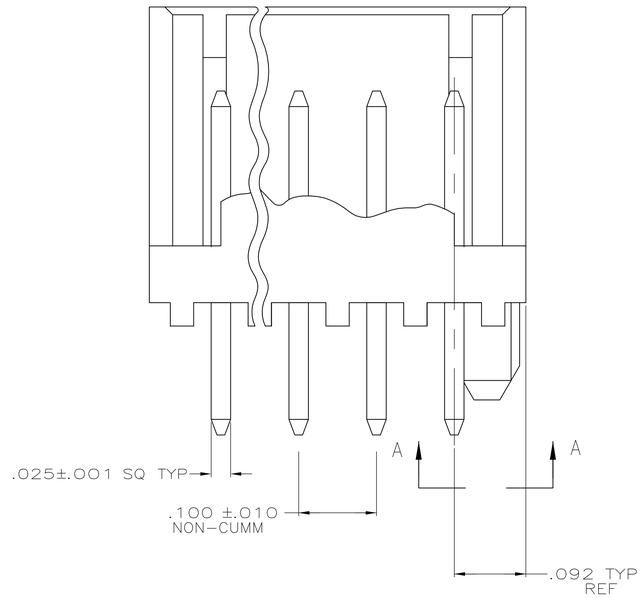


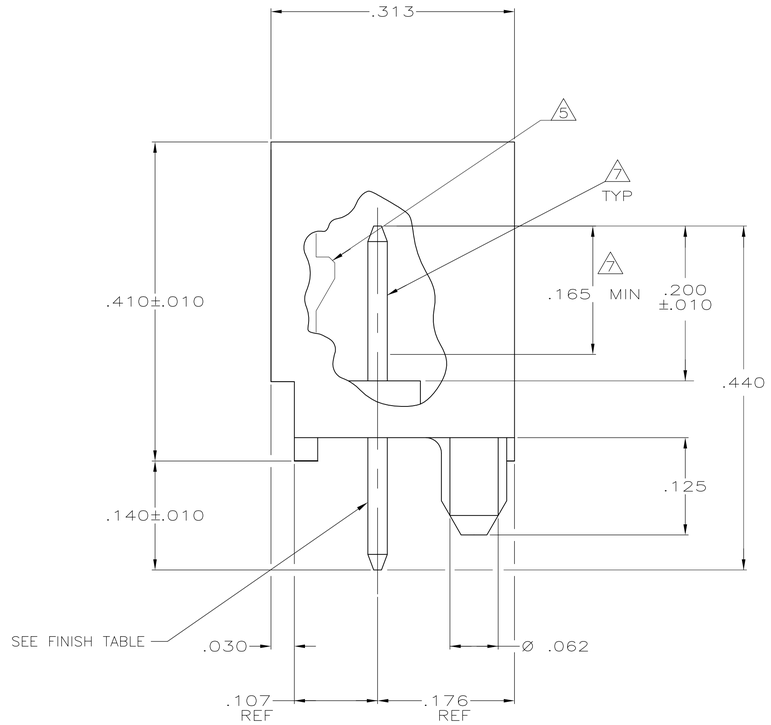


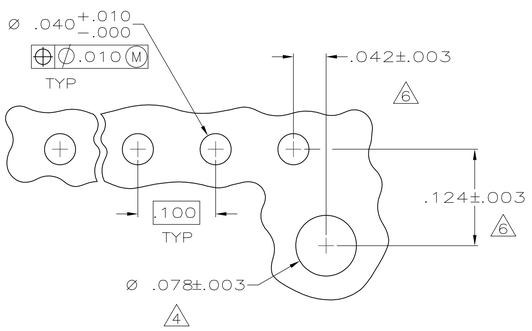


RECOMMENDED MOUNTING HOLE PATTERN
FOR .063 THK PRINTED CIRCUIT BOARD 2

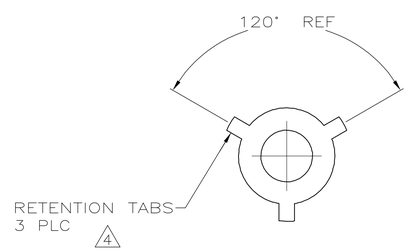


VIEW A–A

| | | IN | MM | NO OF POSITIONS | PART NUMBER |
|---|---|---|---|---|---|
| YES | 10 | 1.484 | 37.69 | 14 | 3–644487–4 |
| | | 1.384 | 35.15 | 13 | 3–644487–3 |
| | | 1.284 | 32.61 | 12 | 3–644487–2 |
| | | 1.184 | 30.07 | 11 | 3–644487–1 |
| | | 1.084 | 27.53 | 10 | 3–644487–0 |
| | | .984 | 24.99 | 9 | 2–644487–9 |
| | | .884 | 22.45 | 8 | 2–644487–8 |
| | | .784 | 19.91 | 7 | 2–644487–7 |
| | | .684 | 17.37 | 6 | 2–644487–6 |
| | | .584 | 14.83 | 5 | 2–644487–5 |
| | | .484 | 12.29 | 4 | 2–644487–4 |
| | | .384 | 9.75 | 3 | 2–644487–3 |
| | | .284 | 7.21 | 2 | 2–644487–2 |
| NO | 8 | 1.484 | 37.69 | 14 | 1–644487–4 |
| | | 1.384 | 35.15 | 13 | 1–644487–3 |
| | | 1.284 | 32.61 | 12 | 1–644487–2 |
| | | 1.184 | 30.07 | 11 | 1–644487–1 |
| | | 1.084 | 27.53 | 10 | 1–644487–0 |
| | | .984 | 24.99 | 9 | 644487–9 |
| | | .884 | 22.45 | 8 | 644487–8 |
| | | .784 | 19.91 | 7 | 644487–7 |
| | | .684 | 17.37 | 6 | 644487–6 |
| | | .584 | 14.83 | 5 | 644487–5 |
| | | .484 | 12.29 | 4 | 644487–4 |
| | | .384 | 9.75 | 3 | 644487–3 |
| | | .284 | 7.21 | 2 | 644487–2 |
| LEADFREE | FINISH | L | | HEADER ASSEMBLY | |

| | | | | | |
|---|---|---|---|---|---|
| .010 | 0.25 | .107 | 2.72 | .440 | 11.18 |
| .005 | 0.13 | .100 | 2.54 | .410 | 10.41 |
| .003 | 0.08 | .092 | 2.34 | .313 | 7.95 |
| .001 | 0.03 | .078 | 1.98 | .200 | 5.08 |
| .000350 | 0.00889 | .063 | 1.6 | .176 | 4.47 |
| .000150 | 0.00381 | .042 | 1.07 | .165 | 4.19 |
| .000050 | 0.00127 | .040 | 1.02 | .140 | 3.56 |
| .000030 | 0.00076 | .030 | 0.76 | .125 | 3.18 |
| .000 | 0 | .025 | 0.64 | .124 | 3.15 |
| IN | MM | IN | MM | IN | MM |

CONVERSION TABLE

METRIC

THIS DRAWING IS A CONTROLLED DOCUMENT.

DIMENSIONS: INCHES

TOLERANCES UNLESS OTHERWISE SPECIFIED:
0 PLC ± –
1 PLC ± –
2 PLC ± –
3 PLC ± .005
4 PLC ± –
ANGLES ± –

MATERIAL 1
FINISH SEE TABLE

DWN S. CARPENTER 28MAY2003
CHK D. BOSSI 28MAY2003
APVD D. BOSSI 28MAY2003
PRODUCT SPEC
APPLICATION SPEC
WEIGHT

Tyco Electronics
Tyco Electronics Corporation
Harrisburg, PA 17105–3608

NAME
MTA–100 SHROUDED HEADER ASSEMBLY, FRICTION LOCK,STRAIGHT POST, .000030 GOLD

| SIZE | CAGE CODE | DRAWING NO | RESTRICTED TO |
|---|---|---|---|
| A1 | 00779 | C–644487 | – |

CUSTOMER DRAWING
SCALE 10:1 SHEET 1 OF 1 REV F